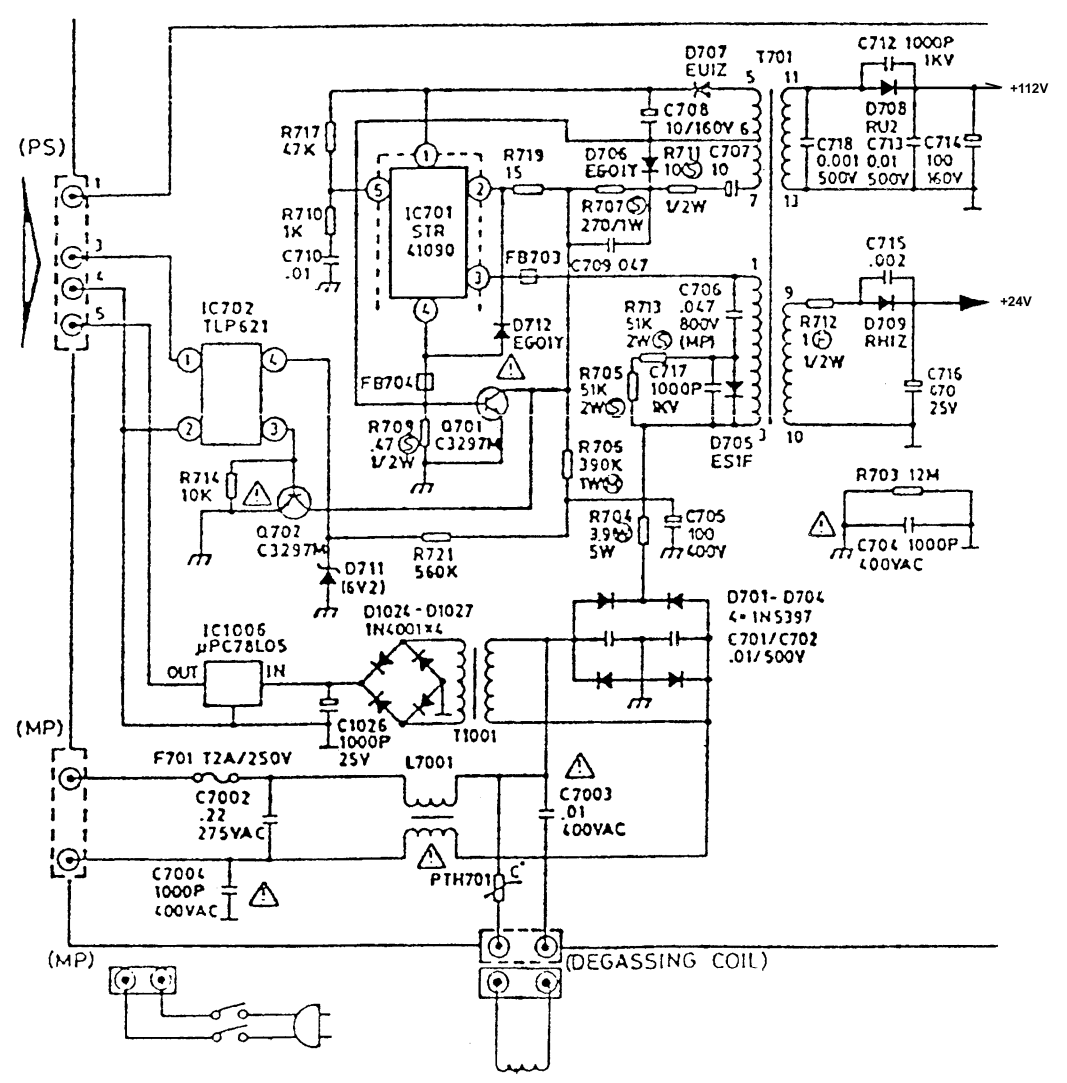
(PS)
(MP)
(MP)
(DEGASSING COIL)
+112V
+24V
D707
EU1Z
T701
C712 1000P
1KV
C708
10/160V
D708
RU2
C718
0.001
500V
C713
0.01
500V
C714
100
160V
R717
47K
R719
15
D706
EG01T
R711
10
C707
10
1/2W
R707
270/1W
R710
1K
C710
.01
IC701
STR
41090
FB703
C709 047
C715
.002
R712
1
1/2W
D709
RH1Z
C716
470
25V
IC702
TLP621
D712
EG01Y
C706
.047
800V
(MP)
R713
51K
2W
FB704
R705
51K
2W
C717
1000P
1KV
D705
ES1F
R709
.47
1/2W
Q701
C3297M
R705
390K
1W
R714
10K
Q702
C3297M
R721
560K
R704
3.9
5W
C705
100
400V
R703 12M
C704 1000P
400VAC
D711
(6V2)
D1024 - D1027
1N4001×4
D701- D704
4×1N5397
C701/C702
.01/500V
IC1006
μPC78L05
OUT
IN
C1026
1000P
25V
T1001
F701 T2A/250V
L7001
C7002
.22
275VAC
C7003
.01
400VAC
C7004
1000P
400VAC
PTH701

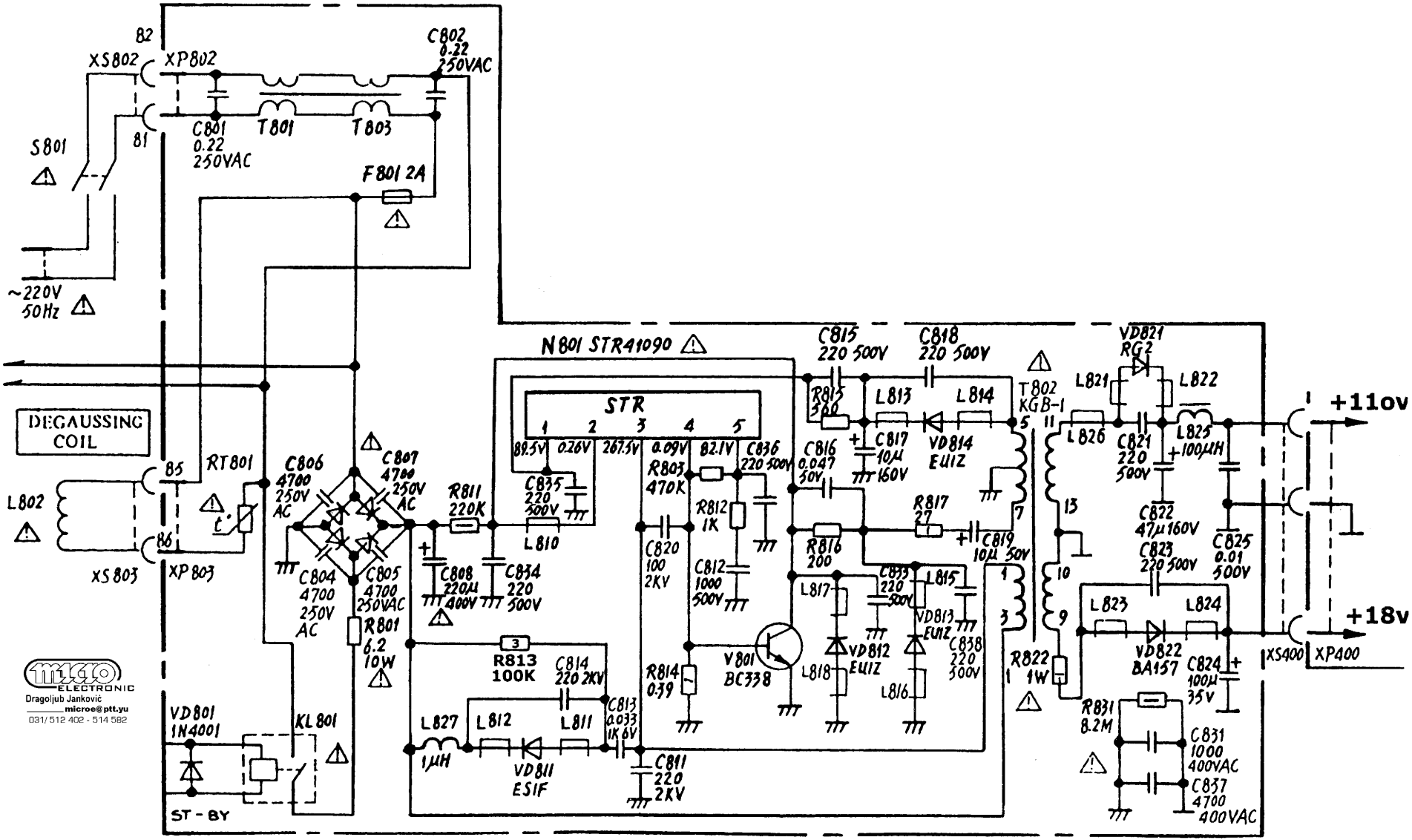
XS802
XP802
82
81
C802
0.22
250VAC
C801
0.22
250VAC
T801
T803
S801
F801 2A
~220V
50Hz
DEGAUSSING
COIL
L802
XS803
XP803
85
86
RT801
C806
4700
250V
AC
C807
4700
250V
AC
C804
4700
250V
AC
C805
4700
250VAC
R801
6.2
10W
R811
220K
C808
220µ
400V
C834
220
500V
N801 STR41090
STR
1
2
3
4
5
89.5V
0.26V
267.5V
0.09V
82.1V
C835
220
500V
L810
R803
470K
C836
220 500V
R812
1K
C820
100
2KV
C812
1000
500V
R814
0.39
V801
BC338
R813
100K
C814
220 2KV
C813
0.033
1K 6V
L827
1µH
L812
VD811
ESIF
L811
C811
220
2KV
VD801
1N4000
KL801
ST - BY
C815
220 500V
C818
220 500V
R815
300
L813
L814
C817
10µ
160V
VD814
EU1Z
C816
0.047
50V
R816
200
R817
27
C819
10µ 50V
L817
VD812
EU1Z
L818
C839
220
500V
VD813
EU1Z
L815
L816
C838
220
500V
T802
KGB-1
R822
1W
L821
VD821
RG2
L822
L826
C821
220
500V
L825
100µH
C822
47µ160V
C823
220 500V
C825
0.01
500V
L823
L824
VD822
BA157
C824
100µ
35V
R831
8.2M
C831
1000
400VAC
C837
4700
400VAC
+11ov
+18v
XS400
XP400
micro ELECTRONIC
Dragoljub Janković
microe@ptt.yu
031/512 402 - 514 582

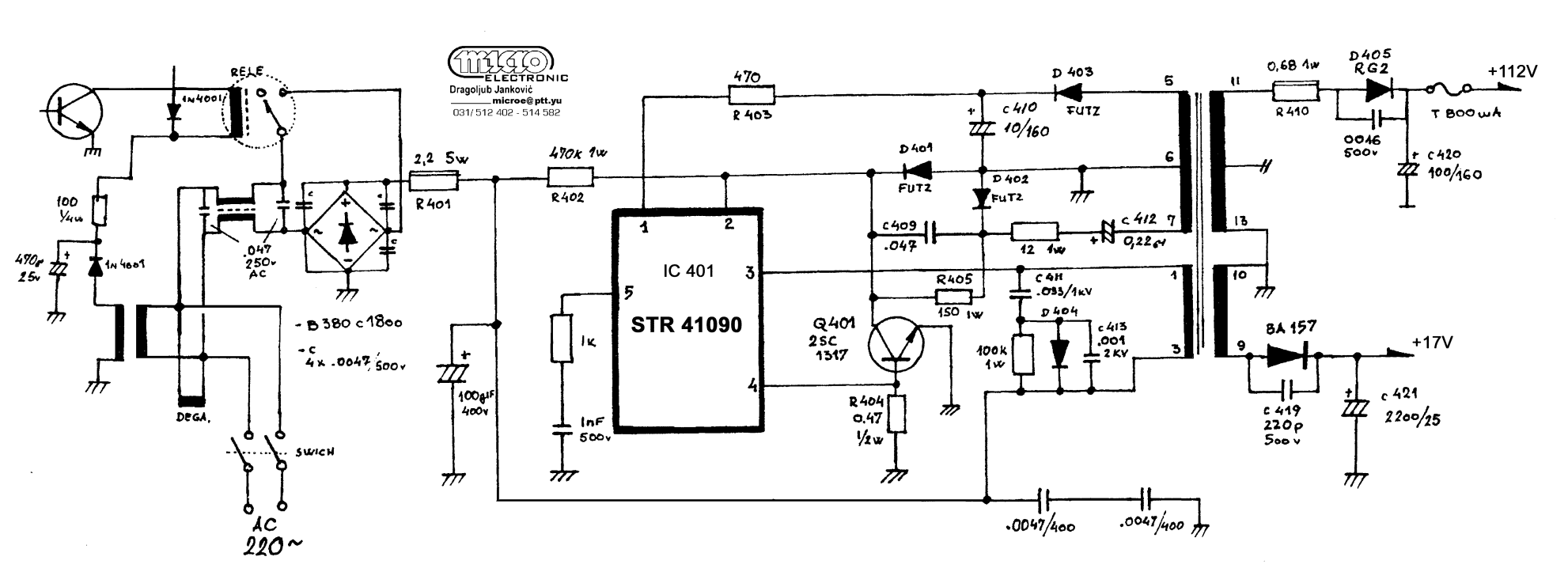
micro ELECTRONIC
Dragoljub Janković
microe@ptt.yu
031/ 512 402 - 514 582
RELE
1N4001
100 1/4w
470µF 25v
1N 4001
.047 250v AC
DEGA
SWICH
AC 220~
- B 380 c 1800
- c 4x .0047/500v
2,2 5w
R401
470k 1w
R402
100µF 400v
1k
1nF 500v
470
R 403
IC 401
STR 41090
1
2
3
4
5
Q401 2SC 1317
R404 0.47 1/2w
c 410 10/160
D 401 FUTZ
D 402 FUTZ
D 403 FUTZ
c409 .047
R405 150 1w
12 1w
c 412 0,22µ
c 411 .033/1kV
D 404
c 413 .001 2KV
100k 1w
.0047/400
.0047/400
0,68 1w
R 410
D405 RG2
0016 500v
T 800mA
+112V
c 420 100/160
BA 157
c 419 220p 500v
c 421 2200/25
+17V

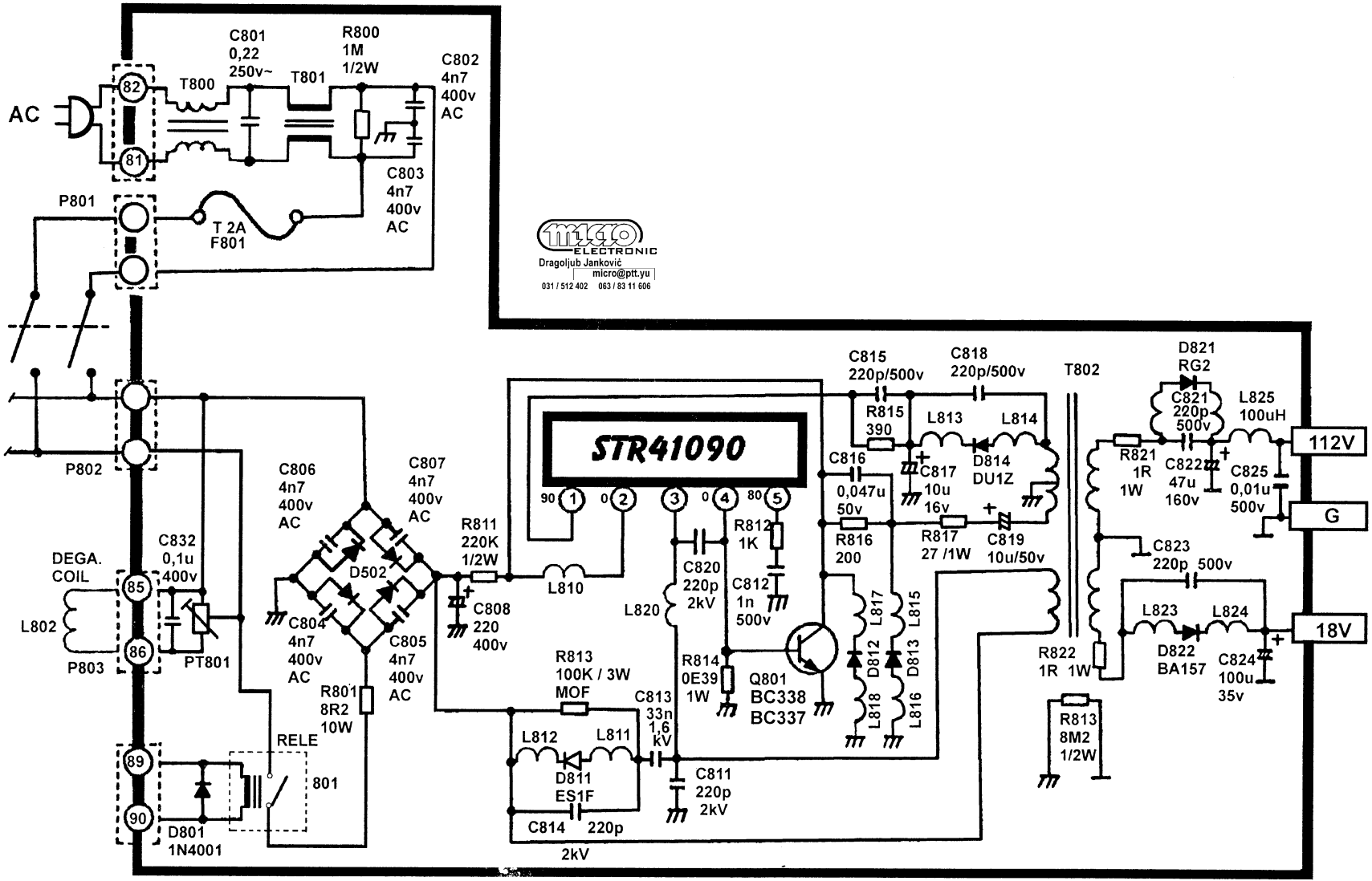
AC
82
81
T800
C801
0,22
250v~
T801
R800
1M
1/2W
C802
4n7
400v
AC
C803
4n7
400v
AC
P801
T 2A
F801
P802
STR41090
C806
4n7
400v
AC
C807
4n7
400v
AC
D502
C804
4n7
400v
AC
C805
4n7
400v
AC
R801
8R2
10W
C832
0,1u
400v
PT801
DEGA.
COIL
L802
P803
85
86
89
90
RELE
801
D801
1N4001
R811
220K
1/2W
C808
220
400v
L810
R813
100K / 3W
MOF
L812
L811
D811
ES1F
C814
220p
2kV
C813
33n
1,6
kV
C811
220p
2kV
C820
220p
2kV
L820
R812
1K
C812
1n
500v
R814
0E39
1W
Q801
BC338
BC337
C815
220p/500v
C818
220p/500v
R815
390
L813
L814
C816
0,047u
50v
C817
10u
16v
D814
DU1Z
R816
200
R817
27 /1W
C819
10u/50v
L817
L815
D812
D813
L818
L816
T802
R822
1R 1W
R813
8M2
1/2W
D821
RG2
C821
220p
500v
L825
100uH
R821
1R
1W
C822
47u
160v
C825
0,01u
500v
112V
G
C823
220p 500v
L823
L824
D822
BA157
C824
100u
35v
18V
90
0
80
micro
ELECTRONIC
Dragoljub Janković
micro@ptt.yu
031 / 512 402 063 / 83 11 606